RIPPA®

RS04 | STAND-ON COMPACT LOADER AND ATTACHMENTS



RS04: EXCLUSIVE FEATURES

Compact yet powerful, the RIPPA RS04 Stand-on Skid Steer Loader delivers outstanding performance in a small footprint. Designed for agility and efficiency, it easily handles tough jobs in tight spaces — the perfect choice for construction, landscaping, and farm work.



ENGINE

KUBOTA Z482 ENGINE, RATED POWER 8.2KW (11.0HP)

· High-Efficiency power output

· Low fuel consumption

· Low noise & vibration



PUMP

TRIPLE GEAR PUMP

· Provides stable hydraulic flow

· Flow rates of 18 + 12 + 12 L/min

· Smooth operation, excellent compound action



VALVE

MECHANICAL VALVE

· Simple and reliable, easy to operate with low failure rate.

· Durable, withstands harsh working conditions.

· Cost-effective, low mainte nance and long service life.

· Smooth and responsive oper ation,consistent hydraulic per formance under varying loads.



RS04 RIPPA

TRACK

INTEGRATED TRACK DESIGN

- Optional tracked or wheeled version
- Smooth driving with little vibration
- Easily handle slopes and complex working conditions

POWER & PERFORMANCE



KEY FEATURES



» Kubota Z482 engine, rated at 8.2 kw (11.0 HP), delivers strong power with low fuel consumption, reliable performance, and easy maintenance.



» Hydraulic pump directly connected to the engine reduces maintenance.



» Combining fast loading with efficient operation, with powerful hydraulics and precise control, you can easily move heavy objects, saving time and labor.
The maximum unloading height 1553 mm, and the maximum loading capacity 480 kg.



» 930 kg (2050 lb) combined with 42 L/min (11.2 gpm) main pump hydraulic flow make for a powerful and high-performance skid steer loader.



» The 1150mm compact body allows easy maneuvering through tight spaces, making operations in confined areas smooth and efficient.

» Best-in-class travel speed of 2.5 km/h (1.55 mph).

OPERATOR CONTROLS



KEY FEATURES



» The control panel features a comfortable and efficient design, equipped with dual-hand levers and independent attachment control levers.

The instrument panel provides real-time monitoring of equipment status.





» The attachment operating lever provides precise hydraulic control, enabling efficient and flexible operation of various attachments.

» Provides hydraulic power for various attachments.



KEY FEATURES



» 2 group of 5 attachment oil circuits enables simultaneous and precise operation of multi-functional attachments.

» Auxiliary hydraulic flow of 18 L/min (4.8 gpm) provides stable power for various attachments.



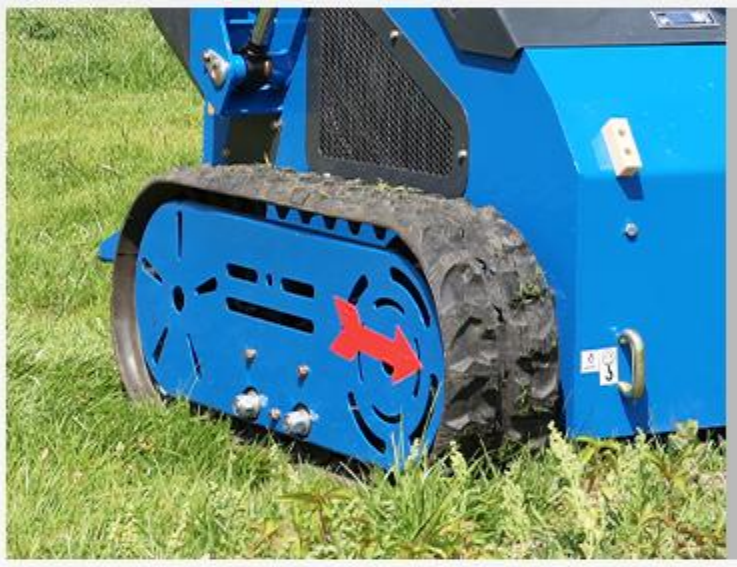

» Modular Mobility System – 15-Minute Track/Wheel Conversion for All-Terrain Dominance.

» The high-torque, low-speed travel motor can smoothly start and brake huge inertial loads, ensuring stable passage on complex terrain.





» High-brightness LED work lights with wide coverage, shock-resistant, and energy-efficient for optimal visibility in any environment.



» The floating bucket function allows the bucket to automatically adjust its angle as the ground rises and falls, keeping the bucket close to the ground during operation.

» Suitable for cleaning, leveling and easily following uneven roads.



KEY FEATURES



» The lifting holes are sturdy in structure and reasonably located, making it easy to lift and load the whole machine safely.

» The position of the lifting holes has been calculated based on the force to ensure stability.





» The oil pipe adopts a built-in pipe arrangement, which caneffectively protect the oil pipe, reduce wear and tear andprolong the service life of the oil pipe.



KEY FEATURES



- The quick-change device can quickly and safely switch between various attachments
- Regular inspection, lubrication and rust prevention maintenance can significantly extend its service life.



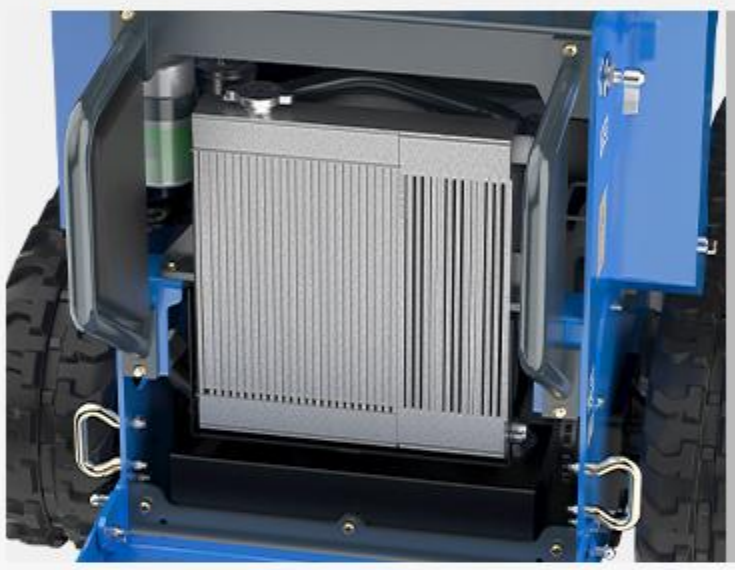

- The radiator ensures that the engine and hydraulic system operate stably at a safe temperature through efficient cooling.
- Heat is efficiently dissipated through perforated channels on the back.





- The non-slip foot pedals are equipped with gas spring support and can be easily flipped up.
- Durable design ensures reliable performance in wet or muddy conditions.



- The power switch safely turns on or off all electrical circuits to prevent misuse.Turning it off during long periods of inactivity prevents battery drain and extends battery life.



PERFORMANCE MATCHED

When replacing auxiliary equipment such as trencher,stump grinder,log grapple， the process ensures you that the hydraulic requirements, weight, and width of your attachment matches your power unit's exact specifications.

Visit rippa.com



DIRECT DIGGING

· Digging depth: 800 mm

· Bucket capacity: 0.15 m³

· Number of hydraulic lines: 1

· Length: 1.8 m, Width: 0.8 m, Height: 0.58 m

· Weight: 110 kg



GRAPPLE BUCKET

· Grab capacity: 0.25 m³

· Opening width: 1150 mm

· Length: 1.25 m, Width: 0.85 m, Height: 0.8 m

· Weight: 140 kg



ENCLOSED SWEEPER

· Sweeping width: 1200 mm

· Brush material: Nylon and steel wire

· Brush speed: 200 rpm

· Hydraulic motor model: 2K-100

· Collection box capacity: 0.2 m³

· Length: 1.5 m, Width: 1.4 m, Height: 0.65 m

· Weight: 170 kg



MOWER

· Cutting width: 1200 mm

· Blade type: Straight blade

· Number of blades: 3

· Protective panel configuration

· Cutting height adjustment: 500 mm

· Length: 1.35 m, Width: 1.4 m, Height: 0.85 m, Weight: 184 kg



BRUSH CUTTER

· Cutting diameter: 1100 mm

· Blade material: Manganese steel

· Required hydraulic flow: 30 L/min

· Suitable vegetation: Shrubs with a diameter less than 30 mm

· Length: 1.6 m, Width: 1.3 m, Height: 0.5 m, Weight: 165 kg



DOZER BLADE

· Blade width: 1150 mm

· Blade height: 600 mm

· Maximum dozing angle: 30°

· Hydraulic tilt function

· Material: Q235

· Length: 1.25 m, Width: 0.7 m, Height: 0.8 m, Weight: 130 kg



4 IN 1 BUCKET

· Bucket capacity: 0.25 m³

· Maximum opening width: 1100 mm

· Operation mode: Hydraulic

· Number of hydraulic cylinders: 2

· Material: Q235

· Length: 1.15 m, Width: 0.75 m, Height: 0.65 m, Weight: 140 kg



LIFTING DEVICE

· Rated lifting capacity: 300 kg

· Maximum lifting height: 3 m

· Boom length: 2000 mm

· Hydraulic rotation function

· Safety valve setting pressure: 160 bar



TRACTION DEVICE

· Connection type: Ball head connection

· Length: 0.7 m, Width: 0.5 m, Height: 0.3 m

· Weight: 32 kg

RIPPA ATTACHMENTS



MIXING BARREL

· Capacity: 0.25 L

· Material: Q235

· Discharge method: Mechanical

· Required hydraulic flow: 30 L/min

· Length: 0.7 m, Width: 0.9 m, Height: 0.7 m, Weight: 116 kg



RIPPER

· Teeth quantity: 2

· Replaceable tooth tips

· Maximum loosening depth: 200 mm

· Length: 0.67 m, Width: 0.5 m, Height: 0.6 m

· Weight: 43 kg



SWEEPER

· Sweeping width: 1200 mm

· Brush material: Nylon and steel wire

· Brush rotation speed: 200 rpm

· Hydraulic motor model: 2K-100

· Length: 1.55 m, Width: 1.15 m, Height: 0.9 m, Weight: 130 kg



FORK

· Rated load: 500 kg

· Overflow protection device

· Fork width adjustment method: Manual

· Adjustable fork distance: 800 mm

· Length: 1.2 m, Width: 0.72 m, Height: 0.3 m, Weight: 92 kg



SIDE-SHIFT PALLET FORK

· Rated load: 500 kg

· Side shift range: 50 mm

· Adjustment method: Hydraulic

· Length: 1.25 m, Width: 0.72 m, Height: 0.4 m

· Weight: 110 kg



LOG GRAPPLE

· Grab capacity: 0.25 m³

· Opening width: 1150 mm

· Length: 1.1 m, Width: 0.85 m, Height: 0.8 m

· Weight: 150 kg

ROTARY DRILL

· **800 mm length, 150 mm diameter**
· Length: 0.9 m, Width: 0.5 m, Height: 0.58 m
· Weight: 110 kg

· **800 mm length, 200 mm diameter**
· Length: 0.9 m, Width: 0.5 m, Height: 0.58 m
· Weight: 112 kg

· **800 mm length, 220 mm diameter**
· Length: 0.9 m, Width: 0.5 m, Height: 0.58 m
· Weight: 112 kg

· **800 mm length, 250 mm diameter**
· Length: 0.9 m, Width: 0.6 m, Height: 0.58 m





ROCK BUCKET

· Length: 1.0 m, Width: 0.5 m, Height: 0.6 m

· Weight: 99 kg



LAND LEVELER

· Length: 1.38 m, Width: 1.3 m, Height: 0.55 m

· Weight: 42 kg



BREAKER

· Length: 0.7 m, Width: 1.0 m, Height: 0.41 m

· Weight: 130 kg

DETAILED PARAMETER CONFIGURATION

Basic performance parameter		
Machine working weight	930kg	2050 lb
Bucket capacity	0.15m³	5.3 ft³
Rated load mass (safe load)	240kg	529.1 lb
Maximum load mass	480kg	1058.2 lb
Travel speed low/high speed	0-2.5km/h	0-1.55mph
Gradeability	25%	25%
Ground pressure	25.17kpa	3.7psi
Maximum unloading height	1553mm	61.2in
Maximum loading height	2080mm	82.0in
Maximum unloading distance	550mm	21.7in
Minimum ground clearance	108mm	4.3in
Body		
Transport length - with bucket (mm)	1970mm	77.6in
Transport length - without bucket (mm)	1520mm	59.8in
Transport width (mm)	1150mm	45.3in
Transport height (mm)	1300mm	51.2in
Bucket width (mm)	1150mm	45.3in
Engine		
Engine brand	Kubota	Kubota
Engine model	Z482	Z482
Maximum horsepower	11.0hp	11.23ps
Maximum power	8.2kw	8.2kw
Maximum speed	3000rpm	3000rpm
Displacement	0.479L	0.13gal
Number of cylinders	2	2
Cooling method	Water cooling	Water cooling
Engine oil change amount	2.5L	0.66gal
Fuel form	Diesel	Diesel
Fuel grade	0/-10	0/-10
Theoretical fuel consumption	0.8-1.2L/h	0.21–0.32gal
Hydraulic system		
Main pump type/model	6ml/r＋4ml/r＋4ml/r	
Main pump brand	Tianjin Walking	
Multi-way valve (Left/Center/Right)	Two-section multi-way valve	
Multi-way valve	Tengfei	
Travel motor brand	Deston	

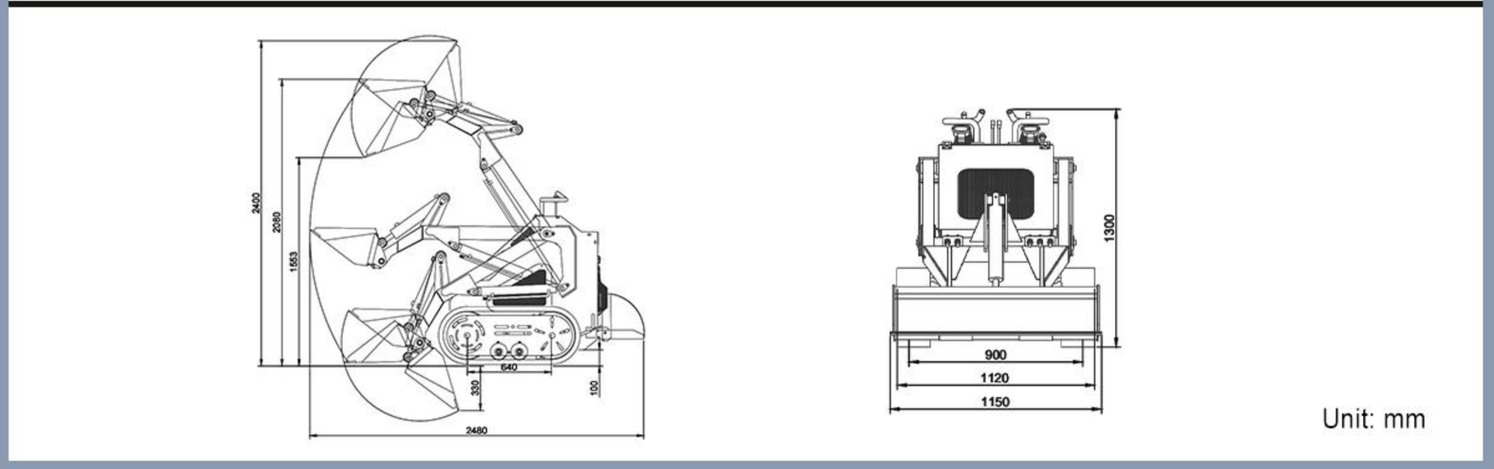

Unit: mm

Shandong Rippa Machinery Group Co., Ltd.

Address: No. 39, Guang'an Road, Liuhang Sub-district Office, High-tech Zone, Jining City, Shandong Province.

Some specifications are based on engineering measurements and may differ from actual conditions. Specifications are for comparison purposes only and are subject to change without notice.Specifications of individual RIPPA devices may vary due to normal variations in design, manufacturing, operating conditions and other factors. Some images of RIPPA devices are not limited to standard packages.

RIPPA®